Available online at www.sciencedirect.com
SCIENCE DIRECT®
PERGAMON
Acta Astronautica 58 (2006) 605–616
ACTA ASTRONAUTICA
www.elsevier.com/locate/actaastro

See journalofcosmology.com

# Dawn: A mission in development for exploration of main belt asteroids Vesta and Ceres

Marc D. Rayman[a,*], Thomas C. Fraschetti[a], Carol A. Raymond[a], Christopher T. Russell[b]

[a]*Jet Propulsion Laboratory, California Institute of Technology, 4800 Oak Grove Dr., Pasadena, CA 91109, USA*
[b]*Institute of Geophysics and Planetary Physics, University of California, Los Angeles, CA 90095, USA*

Received 14 June 2005; received in revised form 3 January 2006; accepted 31 January 2006
Available online 5 April 2006

**Abstract**

Dawn is in development for a mission to explore main belt asteroids in order to yield insights into important questions about the formation and evolution of the solar system. Its objective is to acquire data from orbit around two complementary bodies, (4) Vesta and (1) Ceres, the two most massive asteroids. The project relies on extensive heritage from other deep-space and Earth-orbiting missions, thus permitting the ambitious objectives to be accomplished with an affordable budget.
© 2006 Elsevier Ltd. All rights reserved.

## 1. Introduction

The Dawn Project is designed to yield a significant increase in the understanding of the conditions and processes acting at the solar system's earliest epoch by examining the geophysical properties of two complementary bodies, (1) Ceres and (4) Vesta. The scientific investigations will use panchromatic and multispectral imagery; visible, infrared, $\gamma$ ray, and neutron spectrometry; and gravimetry. To acquire these data, the project will send a spacecraft to orbit both bodies. Dawn will be the first mission to orbit a main belt asteroid and the first to orbit two extraterrestrial (and nonsolar) bodies.

Dawn is the ninth project in the National Aeronautics and Space Administration's (NASA's) Discovery Program. Part of NASA's Science Mission Directorate, Discovery is designed to conduct missions that answer focused questions in solar system science with more limited costs and more frequent launches. It also provides the scientific community with more direct responsibility for missions. Discovery complements NASA's larger planetary science projects.

The Discovery Program places strict limits on the maximum duration of the development phase, the total lifecycle cost, and other programmatic and management aspects of the projects. Discovery projects are proposed and led by principal investigators (PIs).

The Dawn PI is responsible for the stewardship of the project from its proposal in 2001 to its completion in 2016. In addition to the overall leadership of the mission, the PI directly leads the scientific team, which consists of 21 members from the United States, Germany, and Italy. The Dawn Science Center, located at the University of California, Los Angeles and directed by the PI, will coordinate science and instrument operations.

The PI has delegated project management to the Jet Propulsion Laboratory (JPL). JPL also has responsibility for management of the spacecraft and science payload development, safety and mission assurance, project

* Corresponding author. Tel.: +1 818 354 2544; fax: +1 818 393 6520.
*E-mail address:* mrayman@jpl.nasa.gov (M.D. Rayman).

0094-5765/$ - see front matter © 2006 Elsevier Ltd. All rights reserved.
doi:10.1016/j.actaastro.2006.01.014

systems engineering, mission design and navigation development, mission operations system development, and mission operations. Together the spacecraft and the payload form the Dawn flight system.

The PI selected Orbital Sciences Corporation ("Orbital") to provide most of the spacecraft. Orbital is in charge of the overall assembly, including integration of the instruments, system-level tests, and launch operations. JPL delivers the ion propulsion system and parts of the electrical power system and telecommunications system to Orbital. While spacecraft management is at JPL, spacecraft system engineering resides at Orbital.

Two of the three scientific instruments are contributed to Dawn by other countries. The framing camera (FC) is donated by Germany. The Max-Planck-Institut für Sonnensystemforschung (Max Planck Institute for Solar System Research) is responsible for the design, fabrication, and testing in cooperation with the Institut für Planetenforschung (Institute for Planetary Research) of the Deutsches Zentrum für Luft- und Raumfahrt (German Aerospace Center) and the Institut für Datentechnik und Kommunikationsnetze (Institute for Computer and Communication Network Engineering) of the Technischen Universität Braunschweig (Technical University of Braunschweig). Italy is donating the visible and infrared (VIR) mapping spectrometer. ("Vir" is Latin for "man.") It is provided through Agenzia Spaziale Italiana (Italian Space Agency), and it was designed, built, and tested at Galileo Avionica.

Following an overview of the scientific motivation for the mission, we describe the payload and the spacecraft. While significant flexibility in such a long mission assures that there will be some changes, the current baseline is discussed. Then the status of the project and near-term plans are presented.

## 2. Scientific objectives

A mission to Vesta and Ceres addresses important questions in the origin and evolution of the solar system. The science underlying the Dawn mission as well as descriptions of the current understanding of Vesta and Ceres have been described in detail elsewhere [1]. A summary is presented here.

The accretion of bodies during the earliest stages of the solar system led to the growth of planets. Jupiter's gravity is believed to have interfered with this process, thus depriving the region between it and Mars of a single planet and leaving instead a belt of protoplanets. Collisions during the subsequent 4.5 billion years have reduced the size and increased the number of the asteroids, and complex dynamics have caused some of the fragments to be transported from the asteroid belt to elsewhere in the solar system. For example, (433) Eros, which was studied in detail by the Discovery Program's Near Earth Asteroid Rendezvous Shoemaker mission, appears to be homogeneous, likely a fragment of a larger body. Eros is approximately 30 km × 13 km × 13 km in size.

Table 1
Physical and orbital characteristics of Vesta and Ceres

| Parameter | Vesta | Ceres |
|---|---|---|
| Principal radii (km) | 289 × 280 × 229 | 487 × 487 × 455 |
| Bulk density (g/cm$^3$) | 3.7 | 2.1 |
| Rotational period (h) | 5.34 | 9.08 |
| Perihelion (AU) | 2.15 | 2.55 |
| Aphelion (AU) | 2.57 | 2.99 |
| Inclination (deg) | 7.1 | 10.6 |

AU is astronomical unit.

Vesta and Ceres are the two most massive asteroids, and they are far larger than the other asteroids visited by spacecraft. Both have survived largely intact through the collisional history of the solar system. They preserve retrievable records of the physical and chemical conditions during the solar system's early planet-forming epoch. Some of their relevant characteristics are listed in Table 1.

Vesta appears to be a dry, differentiated body, with evidence of pyroxene-bearing lava flows. Telescopic observations reveal mineralogical variations across its surface. An apparent impact crater 460 km in diameter centered near its south pole may have excavated ~1% of Vesta and demonstrates that impacts likely played an important role in its history.

Comparison of reflectance spectra suggests that achondritic meteorites known as HEDs (for their principal constituents of howardite, eucrite, and diogenite, all of which are magmatic rocks that form at high temperatures) are fragments of Vesta. Confirmation of this important possibility would lend great weight to the use of laboratory studies of HED meteorites to contribute to the development of a description of Vesta's structure and evolution. Discovering the geological context for the HED meteorites is, thus, a key objective for Dawn.

Ceres, the largest body in the asteroid belt and only slightly farther from the Sun than Vesta, is very different. It does not reveal the rich reflectance spectrum that Vesta does, and no meteorites have been linked to it. Microwave observations have been interpreted to mean that it is covered with a material like clay, which would indicate water played a role in Ceres' history. Further

No! Dark matter planets are formed within PGC (protoglobularstarcluster) clumps of ~ earth-mass primordial fog particles (PFPs) at ~ 300 kyr at the plasma to gas transition.

support for this conclusion comes from the detection of a possible signature of hydrated minerals. Evidence of OH escaping from the northern limb fits with a model in which a winter polar cap is replenished by subsurface percolation which dissipates in the summer. Subsurface water ice could be preserved within Ceres for the age of the solar system.

Vesta, which is believed to have melted and differentiated, and Ceres, with its apparent inventory of water ice which slowed its thermal evolution, form a bridge from the rocky bodies of the inner solar system to the icy bodies of the outer solar system. The profound differences in geology between these two protoplanets that formed and evolved so close to each other makes Dawn's comparison compelling.

Dawn's level 1 requirements, expressed as measurement objectives, are designed to provide insight into the nature of these two bodies and, thus, the conditions and processes that have acted upon them from their formation to the present. The science for Dawn then is captured in these requirements, which are tied to the instruments described in the next section:

1. Determine the bulk density of Vesta and Ceres to $\leqslant 1\%$.
2. Determine the spin axis orientation of Vesta and Ceres to $\leqslant 0.5°$.

3a. Determine the gravity field of Vesta with a half-wavelength resolution $\leqslant 90$ km.

3b. Determine the gravity field of Ceres with a half-wavelength resolution $\leqslant 300$ km.

4a. Obtain images of $\geqslant 80\%$ of the surface of Vesta with a sampling $\leqslant 100$ m/pixel and a signal-to-noise ratio $\geqslant 50$ in the clear filter and in $\geqslant 3$ color filters.

4b. Obtain images of $\geqslant 80\%$ of the surface of Ceres with a sampling $\leqslant 200$ m/pixel and a signal-to-noise ratio $\geqslant 50$ in the clear filter and in $\geqslant 3$ color filters.

5a. Obtain a topographic map of $\geqslant 80\%$ of the surface of Vesta, with a horizontal resolution $\leqslant 100$ m and a vertical resolution $\leqslant 10$ m.

5b. Obtain a topographic map of $\geqslant 80\%$ of the surface of Ceres, with a horizontal resolution $\leqslant 200$ m and a vertical resolution $\leqslant 20$ m.

6a. Measure and map the abundances of major rock-forming elements to a precision $\leqslant 20\%$ with a resolution $\sim 1.5$ times the mapping altitude over the upper $\sim 1$ m of the entire surface of Vesta and Ceres.

6b. Measure and map the abundance of H over the upper $\sim 1$ m of the entire surface of Vesta and Ceres.

6c. Measure and map the abundances of K, Th, and U over the upper $\sim 1$ m of the entire surface of Vesta and Ceres.

7a. Obtain $\geqslant 10,000$ spectral frames of Vesta's surface at wavelengths of 0.25–5 μm with a spectral resolution $\leqslant 10$ nm. At least half of these spectral frames will be at a spatial resolution $\leqslant 200$ m/pixel, with the rest at a spatial resolution $\leqslant 800$ m/pixel. (Note: a spectral frame is defined to be a two-dimensional data structure with one axis representing space and the other representing spectral wavelength.)

7b. Obtain $\geqslant 8000$ spectral frames of Ceres' surface at wavelengths of 0.25–5 μm with a spectral resolution $\leqslant 10$ nm. At least half of these spectral frames will be at a spatial resolution $\leqslant 400$ m/pixel, with the rest at spatial resolution $\leqslant 1600$ m/pixel.

Dawn also has a formal set of relaxed requirements that must be satisfied in order to achieve minimum success. (Such "minimum mission success criteria" are required of all Discovery projects.) These requirements preserve the essential comparative planetology, while allowing for a less comprehensive mission. One feature of the minimum requirements is that either the reflectance spectra or the elemental abundances must be obtained, but both are not required.

## 3. Payload

To acquire the science data, the flight system will carry three instrument systems which are matched to the requirements above. In addition, gravimetry will be accomplished with existing spacecraft and ground systems.

The FC will contribute data needed to satisfy requirements 1–5. In addition, FC will acquire images for optical navigation in the vicinities of Vesta and Ceres. Because both the science imagery and the navigation are required to achieve minimum mission success, the payload includes two identical and physically separate cameras for redundancy, each with its own optics, electronics, and structure. Each unit also has its own protective cover that can be reused in flight. For greater reliability, there is also a backup single-use cover-release mechanism in the event the primary actuator system fails with the cover closed.

FC uses an $f/7.9$ refractive optical system with a focal length of 150 mm. A frame-transfer charge-coupled device (CCD) at the focal plane has $1024 \times 1024$ sensitive 93-μrad pixels, yielding a wide field of view that is well suited to mapping the target bodies.

An 8-position filter wheel permits panchromatic and spectrally selective imaging. The broadest filter allows imaging from about 450 to 920 nm. (This is the only

channel to be used for navigation.) Six of the filters, with center wavelengths from 430 to 920 nm, are 40 nm full-width at half-maximum (FWHM), and a filter at 980 nm is 80 nm FWHM. The filter pass bands are chosen principally to reveal the details of Vesta's mineralogy.

FC uses its own internal sequencing system. In addition to a capability to compress images, the processor can bin pixels or edit images, returning only preselected regions. Each set of electronics includes 8 Gb of internal data storage.

The elemental composition, covered in requirement 6, will be measured with the Gamma Ray and Neutron Detector (GRaND) [2,3] developed by the Los Alamos National Laboratory. The combination of $\gamma$ ray and neutron spectrometry yields the abundances of the major rock-forming elements (O, Mg, Al, Si, Ca, Ti, and Fe). The detection of naturally radioactive K, Th, and U is accomplished solely with $\gamma$-ray spectrometry. The presence of water, as inferred from H, is determined from the epithermal neutrons for low abundance and from the ratio of epithermal to thermal neutrons and the $\gamma$-ray spectrum for higher abundance. Because Gd and Sm have high thermal neutron absorption cross sections, GRaND data may reveal the abundances of these trace elements as well.

GRaND builds on the Gamma Ray/Neutron Spectrometer flown on the Discovery Program's Lunar Prospector and the Neutron Spectrometer on 2001 Mars Odyssey. The instrument on Dawn incorporates four principal channels, using a total of 21 sensors configured to permit separation of the signal from the asteroids from background signals. A photomultiplier tube measures the scintillation caused by the interaction of $\gamma$ rays with a bismuth germanate (BGO) crystal. In addition, $\gamma$ rays are detected by their creation of charge carriers in an array of semiconducting CdZnTe crystals, included as a technology test. Epithermal and fast neutrons are sensed by their interactions with borated plastic scintillators. The $\gamma$ rays generated in the scintillators are measured with the BGO and CdZnTe detectors, and the scintillators are optically coupled to photomultiplier tubes for measurement of the low energy photons. The same photomultipliers observe lithiated glass scintillators for detection of thermal neutrons.

GRaND has a very wide field of view. The sensitivity is not uniform however, and the FWHM of the response, projected onto the target body, is $\sim$1.5 times the altitude. With knowledge of the locations of geological units from the other instruments, spatial variations in elemental composition may be determined to about three times better than GRaND's intrinsic resolution.

Electronics process pulse shapes and amplitudes and perform coincidence or anticoincidence discrimination. Unlike the other instruments, GRaND has no internal data storage.

Data from VIR will satisfy requirement 7, addressing surface mineralogy. The instrument is a modification of the visible and infrared thermal imaging spectrometer [4] flying on Rosetta and Venus Express. It also draws significant heritage from Cassini's visible and infrared mapping spectrometer.

VIR spectral frames are 256 (spatial) $\times$ 432 (spectral). The slit length is 64 mrad. The mapping spectrometer incorporates two channels, both fed by a single grating. A CCD yields frames from 0.25 to 1.0 μm. An array of HgCdTe photodiodes cooled to about 70 K spans the spectrum from 0.95 to 5.0 μm. This broad range covers the signatures of most rock-forming minerals. VIR spectral images can be generated by combining spectral frames separated by flight system motion relative to the target or by an internal scanning mirror.

VIR's electronics can compress images and bin pixels in either dimension. The system has 6 Gb of internal memory, which may be operated as 2 Gb of redundant data storage. The instrument includes a cover that can be reused in flight.

## 4. Spacecraft

The spacecraft design benefits from extensive inheritance from previous projects at Orbital and JPL. The mechanical design is based upon Orbital's STAR-2 series, and the avionics draw heavily from the LEOStar-2 series. JPL contributes its experience with deep-space missions as well as special expertise in selected subsystems. There is significant redundancy throughout the design, and the mission can be accomplished in the presence of most credible single faults. The flight system is shown in Fig. 1.

The core of the structure is a graphite composite cylinder. The hydrazine and xenon tanks mount inside the cylinder, which provides a load path directly to the launch vehicle interface. Panels for mounting most of the other hardware are aluminum core with aluminum facesheets; access panels and other spacecraft panels have composite facesheets and aluminum cores. All instruments are mounted so the centers of their fields of view are aligned with the spacecraft's $+z$ axis.

The ion propulsion system (IPS) is an expanded version of the system operated extensively on Deep Space 1 (DS1) [5,6]. The Xe tank, titanium overwrapped with composite, has a capacity of 450 kg. To provide high

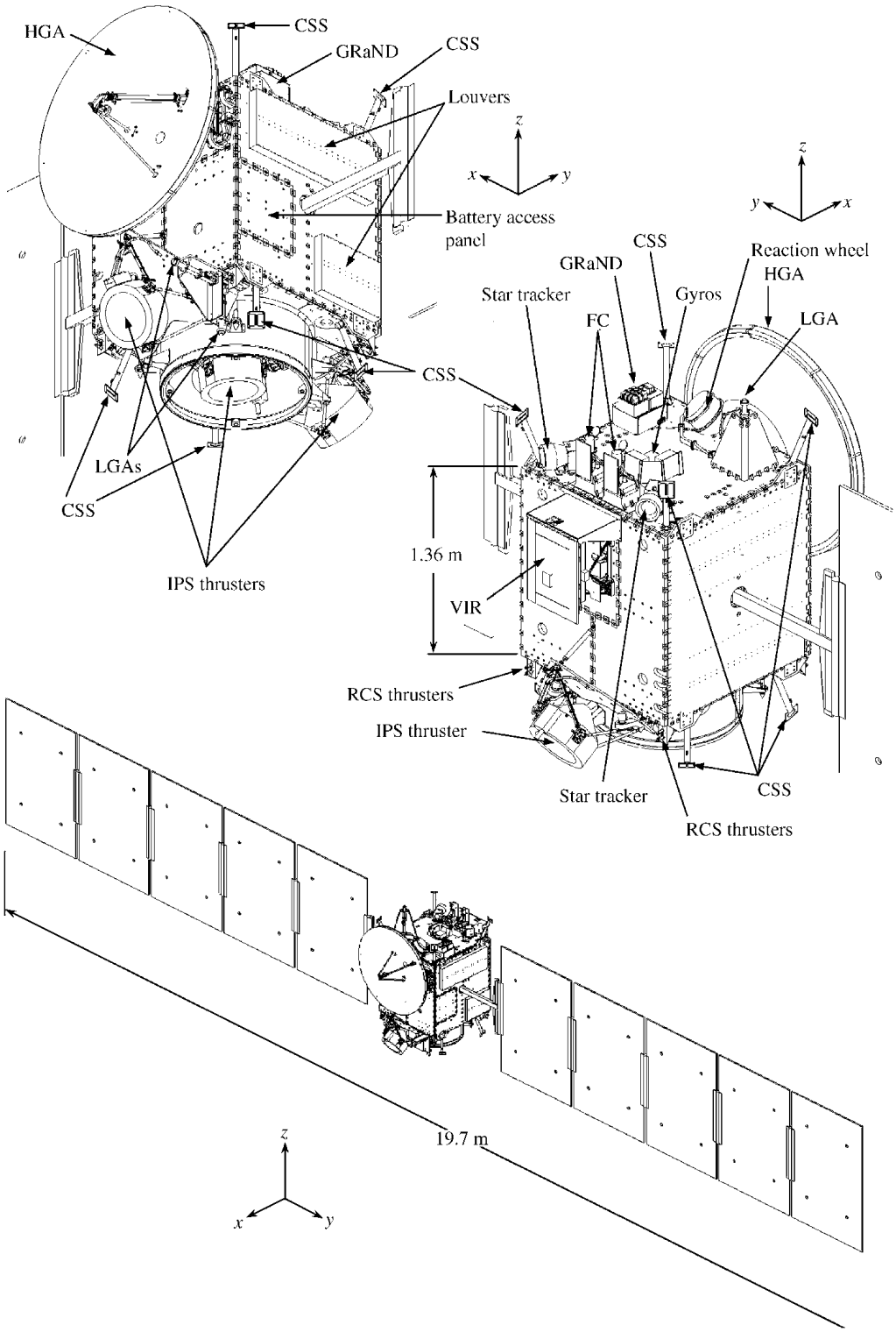


Fig. 1. Dawn flight system. The upper views are the same scale.

reliability in expending that much propellant, the spacecraft carries three ion thrusters. The thruster design is qualified for a throughput of about 150 kg. Each 30-cm-diameter thruster is mounted to a two-axis gimbal to allow for migration of the flight system's center of mass during the mission and to allow the attitude control system (ACS) to use the IPS to control attitude when the IPS is thrusting. The system includes two sets of

interface and control electronics and two power processing units, although no more than one thruster will be operated at a time.

At its maximum throttle level, with an input power of 2.6 kW, the thrust is 92 mN. Throttling is achieved by balancing thruster electrical parameters and Xe feed system parameters; and at the lowest input power, 0.5 kW, the thrust is 19 mN. The specific impulse ranges from 3200 to 1900 s.

Because of Dawn's uniquely high $\Delta v$ requirements, much of the spacecraft design is driven by the resulting requirement to maximize the power available to the IPS.

When the flight system is at Ceres, at a heliocentric range of 3 AU, the electrical power system (EPS) has to provide sufficient power to operate the IPS. Therefore, the spacecraft has two large solar arrays, which together provide 10.3 kW at 1 AU and 1.3 kW at their end of life at 3 AU. Each 18-$m^2$ array uses InGaP/InGaAs/Ge triple-junction cells. The arrays are articulated around their long axis.

Because the IPS requires high voltage power, the flight system has two power buses. The EPS delivers most of the IPS power at 80–140 V, and the rest of the flight system (including some IPS components) receives power at 22–35 V. A 35 Ah $NiH_2$ battery, sized to provide energy during launch, supplements the low-voltage bus during IPS thrusting to cover transients in the flight system's power consumption.

In its normal cruise mode, ACS estimates attitudes and rates with a star tracker. The estimation is augmented with mechanical gyros in some ACS modes, including during science data acquisition. The star trackers and gyros are mounted on the $+z$ panel to minimize mechanical alignment errors between these sensors and FC and VIR. Coarse Sun sensors (CSS), providing $4\pi$-sr coverage, are used for rough attitude determination and for fault protection. All attitude sensors are fully redundant.

ACS controls the articulation of the solar arrays and the basebody to assure that the arrays are normal to the Sun-spacecraft line. ACS can be commanded to use the reaction control system (RCS) or reaction wheels to control the attitude. Either type of actuator can be used in combination with the IPS for attitude control during IPS thrusting.

The hydrazine-based RCS is used by ACS for direct control of attitude or for desaturation of the reaction wheels. In addition, some hydrazine is allocated for a contingency orbit-control maneuver at the asteroids in the event there is insufficient time to achieve the required $\Delta v$ with the low-thrust IPS. The titanium hydrazine tank capacity is 45.4 kg.

RCS has two independent strings, each with six 0.9-N thrusters. Each string has pairs of thrusters pointed in $+x$, $-x$, and $-z$, with the last pair used for the contingency trajectory control.

Because the solar arrays are always maintained normal to the Sun–spacecraft line, the Sun will be in the plane of the $y$ panels. Most components are mounted on those panels in order to take advantage of the relatively uniform thermal environment. Ammonia-based heat pipes embedded in the $y$ panels aid in distributing the heat, and louvers reduce thermal power requirements under cold conditions. Apart from the IPS, the thermal control system (TCS) is the largest consumer of power, requiring 200 W during IPS thrusting at 3 AU.

The command and data handling system (CDHS) is based on a RAD6000 processor running software written in C running in VxWorks. CDHS also provides 8 Gb of mass memory for engineering and scientific data. The system receives telemetry from all ACS sensors and includes drivers for all ACS actuators except the IPS thruster gimbals. Most components communicate over a Mil-Std-1553B data bus, although GRaND uses an RS-422 serial interface.

Of the 15 cards in each string of CDHS, only the card providing the RS-422 interface and time signals for the instruments and the card providing memory used by CDHS itself are new designs. The solar array gimbal card draws its heritage from STAR-2. All others have heritage from Orbital's design for OrbView-4, the Galaxy Evolution Explorer, and the Solar Radiation and Climate Experiment. The flight software inherits over 80% of its code from the same projects.

The largest change to the flight software is the addition of virtual machine language (VML) [7]. VML, currently in use on Mars Odyssey, Mars Reconnaissance Orbiter, and the Spitzer Space Telescope, allows conditionals and complex logic in command sequencing. VML will be used for all commanding during the mission, although in order to rely only on the most basic functions, fault protection does not use it.

CDHS supports uplink data rates from 7.8 b/s to 2.0 kb/s and downlink data rates from 10 b/s to 124 kb/s using rate $\frac{1}{6}$ turbo code, implemented as recommended by the Consultative Committee for Space Data Systems.

The telecommunications system (Telecom) operates in X-band for uplink and downlink. It is based on the Small Deep Space Transponder, validated on DS1 and used on the majority of NASA missions beyond the moon since Mars Odyssey. Radiating 100 W, the traveling wave tube amplifiers are identical to those in use on Mars Reconnaissance Orbiter.

Table 2
Flight system mass

| System | Mass (kg) |
|---|---|
| Mechanical/structure | 108 |
| IPS | 129 |
| EPS | 204 |
| ACS | 37 |
| RCS | 14 |
| TCS | 44 |
| CDHS | 21 |
| Telecom | 28 |
| Harness | 82 |
| Balance | 13 |
| Dry spacecraft | 680 |
| FC | 11 |
| GRaND | 10 |
| VIR | 24 |
| Dry flight system | 725 |
| Hydrazine (full tank) | 45 |
| Neutral mass | 770 |
| Uncertainty | 20 |
| Neutral mass (with uncertainty) | 790 |
| Xe (full tank) | 450 |
| Wet mass (at launch) | 1240 |

An unarticulated 1.52-m high gain antenna (HGA) is on the spacecraft's $+x$ axis, and near-hemispherical (7 dBi) low gain antennas (LGAs) are aligned with $+x$, $+z$, and $-z$. The system is always configured to use only one of the four antennas at a time.

Table 2 shows the mass of the flight system. The *neutral mass*, a parameter of importance for missions using ion propulsion, is defined to be the dry mass plus the hydrazine mass (i.e., the mass not intended for ionization). The mass margin is discussed in the next section. The uncertainty shown in Table 2 is a quantification of the amount by which the mass might grow based on the maturity of the design.

## 5. Mission

The use of ion propulsion dictates some important differences in the mission design compared to missions that employ conventional chemical propulsion [8]. The IPS will be used for all nominal post-launch trajectory control, including interplanetary cruise; trajectory correction maneuvers on approach to Mars; asteroid rendezvous, orbit insertion, and departure; and orbit corrections and transfers at the asteroids. To obtain the best performance, the IPS will be operated at the maximum achievable throttle level, which will decline as the flight system ages and recedes from the Sun, thus causing solar array output to diminish and thermal power loads to increase.

Because both the thrust and the specific impulse depend upon the power delivered to the IPS, the design of the mission is coupled to the design of the flight system. Moreover, the IPS thrust is low, so thrusting is required during the majority of the mission. In addition to the need for positive margins for neutral mass and power, there must be sufficient time to accomplish the required thrusting. The *missed-thrust margin* (also called *mission margin* [8]) is defined to be the duration of unexpected missed thrust that can be accommodated at a specified time. Because of their coupling, the margins for mass, power, and missed thrust cannot be assessed independently. The nature and consequences of this coupling have been described more fully elsewhere [9].

Dawn's interplanetary trajectory is designed to achieve a missed-thrust margin of $\geqslant 28$ days at all times. The missed-thrust margin for solar conjunctions is $\geqslant 28$ days longer than the conjunction.

The trajectory design tool used for Dawn, called Mystic [10], yields the maximum possible neutral mass at launch (which exceeds the neutral mass during most of the mission because of the expenditure of hydrazine), subject to constraints that include the capability of the launch vehicle, the power-dependent thrust and specific impulse of the IPS, and the power available to the IPS as a function of heliocentric range. Other inputs to the design include the launch date, arrival dates at Vesta and Ceres, the departure date from Vesta, and periods of forced coast.

Another key constraint is the duty cycle, defined to be the fraction of time that thrusting is accomplished in the periods that thrusting is desired. Dawn's interplanetary trajectory is designed with a duty cycle of 95%, allowing $> 8$ h/week for telecommunications and other nonthrusting activities. As described below, higher duty cycles should be achievable during much of the mission.

Dawn's baseline launch period extends from 17 June to 7 July 2006. In contrast to most deep-space missions, the launch period is not dictated by celestial mechanics; rather, the opening is defined by an early estimate of flight system readiness to launch and the duration is chosen to ensure a high probability of launching. The long periods of thrusting inherent in missions using an IPS often yield launch periods much broader than those obtained for missions that rely on conventional chemical propulsion, in which maneuvers are more nearly impulsive. The entire launch opportunity has not been explored, but the mass margin remains adequate at least

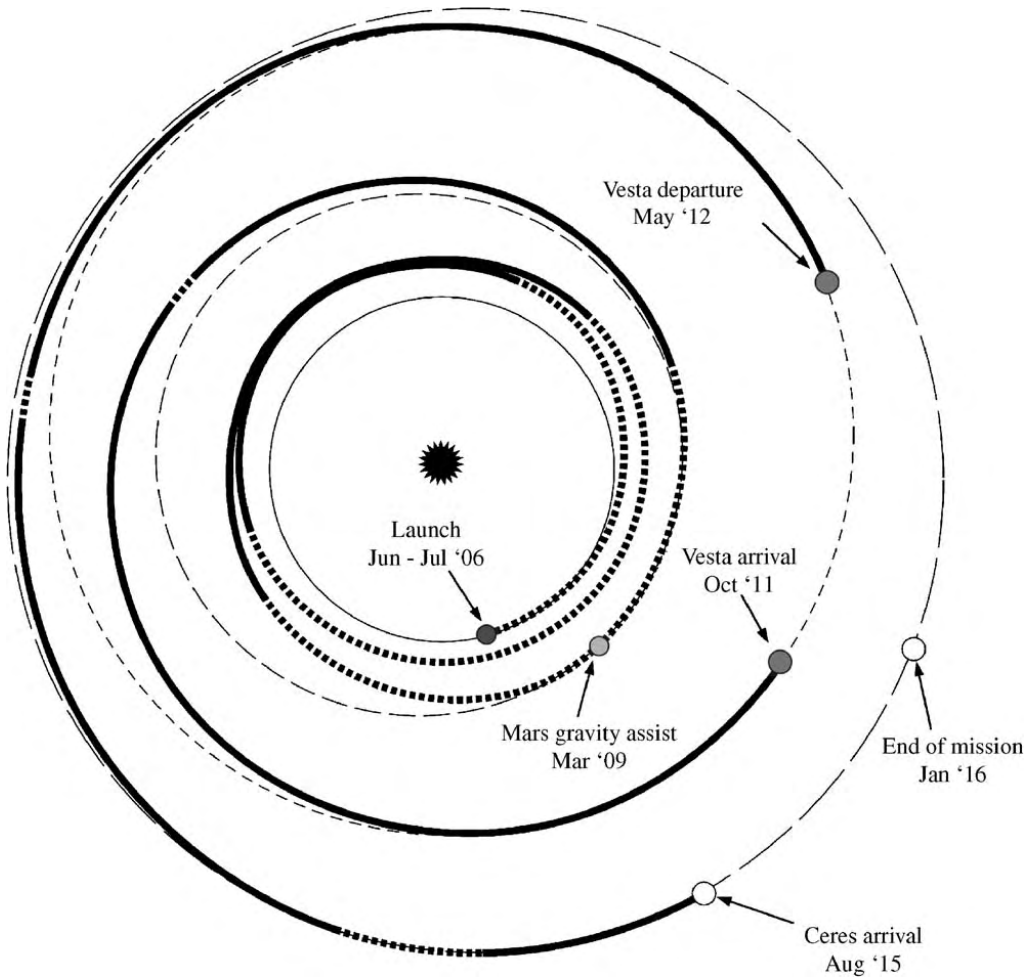


Fig. 2. Dawn baseline interplanetary trajectory for primary mission. The dotted portions denote periods of coasting, and the solid portions show when the IPS is thrusting. Coasting periods $\leqslant 7$ days are not shown.

from May 2006 to September 2007, during which the asteroid arrival dates are essentially unaffected. The ability to satisfy the science objectives over such a broad range of launch dates has proved valuable, because as this paper was in final preparation in October 2005, it was decided to postpone the launch to 2007 to accommodate delays that have occurred during flight system integration as well as to move financial expenditures into a later year.

The mission presented here has been the baseline until this recent decision and is largely unchanged with a later launch. For any launch date, the baseline is on a continuum of options that vary in science return and technical robustness and are distinguished principally by the durations at the two asteroids and, thus, the scope of the activities in orbit. The minimum mission, which satisfies the minimum mission success criteria, spends less time at Vesta and Ceres in exchange for greater technical margins. The decision to switch from the baseline to the minimum may be made in flight. Indeed, the mission design is sufficiently flexible that arrival dates and durations of residences may be modified in many ways. The key technical margins (including mass/power/missed-thrust) at the present are quite large, and if, as is likely, they are not fully consumed by engineering necessities, they can be translated directly into longer times at both bodies, thereby exceeding the science return already described [9]. The interplanetary trajectory is illustrated in Fig. 2.

The interplanetary injection will be accomplished with a Delta II 7925H-9.5, launched from Cape Canaveral Air Force Station. The maximum neutral mass at launch is achieved with an injection of 1290 kg to $C_3 = 3\,\mathrm{km}^2/\mathrm{s}^2$. This allows a neutral mass of 840 kg, providing a comfortable margin compared to the current estimate of 790 kg. The launch vehicle has the

capability to inject 1290 kg to $C_3 = 8\,\mathrm{km}^2/\mathrm{s}^2$, but that would not permit the neutral mass to be as large. In this case, the maximum neutral mass is achieved by using a lower injection energy than the launch vehicle could deliver for the injected mass.

Two months are scheduled for a thorough evaluation of the flight system after launch. This period includes evaluations and tests of the engineering subsystems as well as initial calibrations of the instruments. As part of the engineering tests, the thrust of each IPS thruster will be measured using radiometric tracking. (The acceleration from the IPS is too low to be measured accurately with accelerometers.) This phase of the mission also will include several periods of extended thrusting with the IPS, lasting as long as about 10 days, to verify the readiness of the flight system to conduct the long-term thrusting.

Operations during IPS thrusting will be very similar to what was followed in DS1 [6,11]. During periods of IPS thrusting, the thrusting may be interrupted up to two times per week to turn the flight system to point the HGA to Earth. When the attitude for HGA telecommunications is close to the optimal IPS thrust attitude, thrusting may continue while communicating. Furthermore, at times in the mission that the link is adequate with an LGA in the thrust attitude, it will not be necessary to interrupt thrusting for communications.

In addition to the extended periods of optimal coast, coast periods of 4 days each are inserted twice per year during thrusting periods for conducting activities incompatible with optimal IPS thrusting. While they will not consume that much time, instrument recalibrations will take place during these hiatuses in thrusting. (Other instrument activities that are less dependent on the spacecraft attitude may be conducted while thrusting.)

During the majority of the interplanetary cruise, sequences will last 4 weeks. Dawn is inheriting many of the tools and processes for its mission operations system from JPL's multimission operations system.

Executing a Mars gravity assist (MGA) in March 2009 will provide a heliocentric inclination change of about 3.5° in addition to raising the aphelion. While the mission could be conducted without the MGA, the technical margins would not be as large. Because of the flight by Mars, Dawn is designated a Planetary Protection Category III mission, which includes requirements on the probability of impact by the launch vehicle's upper stage and by the flight system. All such requirements will be satisfied easily with the design of the approach targeting strategy. Navigation during interplanetary cruise and at Mars will use radiometric data combined with spacecraft telemetry of IPS and RCS activity.

The spacecraft will coast through the MGA, but if trajectory correction maneuvers are needed, they will be conducted with the IPS. With an altitude at closest approach of 500 km, the MGA will provide an excellent bonus opportunity for calibration of the instruments as well as the possibility of acquiring valuable scientific data.

With the declining solar array output power and the increasing thermal power load, the power available to the IPS will fall below the highest throttle level at about 2 AU, 4 years after launch.

The low acceleration from the IPS will provide a slow approach to Vesta. The rendezvous will be very much like interplanetary cruise, and the trajectory remains tolerant to unexpected loss of thrusting. (Note also that by the time the flight system reaches Vesta, Dawn will have accumulated $> 1100$ days of IPS operations, so the orbit insertion will be particularly low risk.)

Optical navigation will commence about 3 months before capture. FC images of Vesta with background stars will be edited or compressed onboard and processed by the navigation team, which will generate updates to the IPS thrust profile. Final science observation planning will be aided by the use of some of those FC images as well as others acquired for this purpose, and VIR spectra will be acquired for the same objective. These data also will be essential to the characterization of the physical environment around Vesta, of interest both for scientific reasons and for flight system safety.

The flight system will be captured by Vesta at a range of about 15,000 km, and the spiral to the first science orbit will be complete 2 weeks later on 1 October 2011.

The science observations will be concentrated in three campaigns at Vesta, each conducted in a different circular, Sun-synchronous orbit. The orbit planes are selected to provide good illumination for FC and VIR observations while allowing the flight system to avoid eclipses. (The decision to preclude eclipses was motivated by spacecraft cost-savings.) The orbits (including the spiral transfers between science orbits) are designed so that even if control is lost for as long as 28 days, the flight system will remain safe.

The first science orbit, Vesta Science Orbit 1 (VSO1), has a radius of 2700 km (equatorial altitude of about 2400 km) with a period of 58 h. As Vesta's rotational period is 5 h, it will turn rapidly enough under the flight system that VIR and FC observations will be accomplished in two orbits. Most of the time over the illuminated side will be spent pointing near nadir. Although the majority of time on the unilluminated side will be devoted to downlinking data, some thermal emissivity mapping may be conducted there with VIR's infrared

channel. Vesta will subtend 0.2 rad from this altitude, permitting convenient mapping with FC, which will achieve about 300 m/pixel. VIR will acquire 5000 spectral frames with spatial resolution of about 700 m/pixel. While its sensitivity at the altitude of VSO1 will yield only limited results, GRaND will acquire data throughout this campaign.

Upon completion of VSO1, IPS thrusting will resume for the 3-week transfer to Vesta Science Orbit 2 (VSO2). The VSO2 radius is 950 km (equatorial altitude about 670 km), where the orbital period is 12 h.

The orbit transfers will be similar to interplanetary IPS thrusting but with more frequent hiatuses for Deep Space Network (DSN) contact as well as time for acquisition of optical navigation data. The gradual descent inherent in the use of the IPS lends itself to managing the effects of the higher-order terms of the gravity field, which become increasingly significant as the altitude decreases. Nevertheless, the design for the navigation system (including the characterization of the gravity field) and the means of designing robust orbit transfers will continue through the development phase of the project and into the first years of interplanetary cruise.

VSO2 is low enough to provide the spatial resolutions for the remaining level 1 requirements satisfied with VIR and FC observations, and it provides a ground track needed to accomplish the mapping in a short time. This will be the most complex and intensive science campaign at Vesta. Nadir-pointed FC images will be acquired for the global, multicolor map and multiple view angles will be obtained for the compilation of the topographical map. VIR observations will target areas of special interest identified during approach and VSO1. GRaND will collect data for the entirety of the 3-week VSO2.

To make the most effective use of the time, to the extent possible, activities incompatible with FC and VIR observations will be scheduled for times that the instruments do not have views of the illuminated surface. (Infrared spectra of selected unilluminated surface features still will be acquired.) Because of the high rate of scientific data acquisition in VSO2, DSN coverage will occur daily. In addition, twice each day the flight system will acquire optical navigation data. The current VSO2 plan includes a 4-h orbit-maintenance opportunity each day, although it is anticipated that most of these will not be needed. Additional scientific data may be gathered during many of the unused windows.

The transfer from VSO2 to VSO3 is allocated 30 days. At a radius of 460 km (equatorial altitude of about 180 km), VSO3 is the lowest orbit planned. The orbital period is 4 h. As this transfer will penetrate deeper into Vesta's gravity field, more time will be devoted to navigation. Optical navigation data will be acquired twice daily, and 4 h/day of DSN coverage will provide radiometric data. The transfer also includes three coast periods of 2 days each to gather more extensive navigational data and to allow more time to update plans for the remainder of the transfer.

The focus of science activities in VSO3 will be on the acquisition of GRaND and gravimetric data, although a secondary priority will be to conduct high resolution FC and VIR observations.

GRaND's best data will be acquired when Vesta is within 0.1 rad of $+z$, although the data with Vesta elsewhere in the $+z$ hemisphere still will be useful. Therefore, whenever practicable, activities that require the flight system to turn from the optimal attitude will be designed to keep Vesta within the $+z$ hemisphere. As in higher orbits, some time will be devoted to the acquisition of optical navigation data, and orbit maintenance opportunities will be used as needed. Daily 4-h DSN passes will allow the return of scientific and engineering data and the acquisition of high accuracy radiometrics for gravimetry.

For the baseline mission, Dawn will spend 60 days in VSO3, although that allows more time than is needed to satisfy the level 1 requirements. If measurements from VSO1 or VSO2 are deemed important to repeat, the ascent will begin earlier in order to allow time to reacquire the necessary data and still depart Vesta on schedule.

The ascent and escape from Vesta will be much like the descent except that the gravity field will be known during this phase. If new data from VSO2 or VSO1 (or even other orbits) are to be acquired, those orbit planes will be targeted. It is likely some science data will be acquired during the ascent, as FC and VIR observations with the new solar illumination angles will be of great interest for comparison with data acquired earlier. Dawn will escape from Vesta on 1 May 2012.

The architecture of the rest of the mission, and the strategies for accomplishing it, are quite similar to the preceding phases of the mission. Operations during the interplanetary cruise, Ceres approach and rendezvous, science data acquisition in Ceres Science Orbit 1 (CSO1), CSO2, and CSO3, and the orbit transfers will follow the strategies described above.

As Ceres' surface area and mass both are $> 3$ times those of Vesta (recall from Table 1 that Ceres' density is $< 60\%$ of Vesta's), and the level 1 spatial-resolution requirements for FC and VIR data are lower, the selection and characteristics of the orbits are somewhat different. In addition, even with Dawn's lower wet mass

at Ceres, at its greater heliocentric range, the acceleration from the IPS will be about 2 m/s/day, compared to about 5 m/s/day at Vesta. Of course, the experience gained at Vesta should permit more efficient operations at Ceres.

Dawn will spiral down to reach CSO1 on 1 August 2015. At a radius of 6400 km (equatorial altitude of about 5900 km), the orbital period will be 112 h. The flight system will remain in this orbit for 8 days, acquiring VIR and FC data. As in VSO1, the rotational period of the asteroid (9 h) is fast enough that the instruments will have many opportunities to view every part of the surface from this slow, polar orbit. While CSO1 is designed to provide the required spatial resolution for VIR, the 0.15-rad body will be mapped easily with FC's wide field of view.

The higher resolution mapping with FC and targeted observations with VIR will take place at a radius of 1800 km (equatorial altitude of about 1300 km) in CSO2, with an orbital period of 17 h. CSO3, where the priority is on GRaND measurements and gravimetry, has a radius of 1180 km (equatorial altitude of about 690 km) and a period of 9 h.

Because of the present biological interest in Ceres, founded upon the possibility of its having substantial subsurface water, planetary protection requires that the time to impact after entering Ceres orbit be $\geqslant 50$ years. This will be revisited based on the data Dawn returns, so the applicable requirement may be more or less stringent. For now, the plan is for flight operations for the primary mission to end on 1 January 2016 with the flight system in CSO3.

While the baseline mission devotes 5 months to Ceres, as described earlier there is good reason to anticipate that more time will be available.

It is worth noting that because Ceres is so massive, a controlled (i.e., survivable) landing there is not possible for Dawn. Supporting the flight system in the surface gravity field of $0.028g$, would require a propulsion system thrust of about 200 N, far greater than the capability of the IPS or the RCS.

Although the IPS does not allow a landing, it is clear that it enables this dual asteroid mission. Even a mission to orbit only one of Dawn's target bodies with the use of chemical propulsion is not possible within the constraints of the Discovery Program.

Dawn's post-launch $\Delta v$ of about 11 km/s is close to the total $\Delta v$ provided by the three stages of the Delta 7925H launch vehicle. This is about 2.5 times the greatest $\Delta v$ achieved by any spacecraft's propulsion system to date, with the current maximum of 4.3 km/s having been attained by DS1's IPS [6]. Total thrust time through the mission will be about 2300 days, well in excess of DS1's 678 days of IPS operations.

## 6. Project status and plans

Dawn completed its combined project and flight system preliminary design review (PDR) in October 2003 and critical design review (CDR) in June 2004. The PDR for the ground segment was conducted in December 2003, and its CDR was completed in September 2004.

The assembly, test, and launch operations (ATLO) phase began in January 2005. All of the flight hardware will have been delivered to ATLO by the end of December 2005, and the flight software has all of the functionality needed for the mission. The project has developed three flight system testbeds. Simulators of the spacecraft have been delivered to the instrument providers.

Most ATLO activities take place at Orbital, although some testing, including system-level thermal vacuum and firing the IPS, will be conducted at Goddard Space Flight Center. The schedule for the rest of ATLO, including the date for transporting the flight system to Florida, is to be reevaluated early in 2006.

The project has a carefully planned education and public outreach (EPO) effort with participation from educators and scientists. EPO has begun producing products and will accelerate as launch approaches. The work will continue through the duration of the project. EPO will develop and use materials for students and teachers as well as the general public in topics pertaining both to Dawn's scientific investigations as well as its use of ion propulsion. The educational materials and programs are designed in accordance with national standards and practices. More than simply disseminating information, EPO plans include formulating programs that stimulate active involvement by the target audiences. Wherever meaningful benefits can be gained, Dawn will form partnerships with other EPO programs.

## 7. Conclusion

Dawn is well underway in preparing for a mission to conduct detailed and important investigations in comparative planetology. The data returned from Vesta and Ceres should shed light on major questions in the formation and evolution of the solar system, as they reveal what may be considered the last unexplored worlds in the inner solar system. The use of ion propulsion, combined with other systems that have extensive flight

heritage, allows a project that can yield significant advances in planetary science at an affordable price.

Now less than 2 years from launch, the project is well into its implementation phase. As the flight system progresses through ATLO and even into operations, the flexible mission design can be modified to account for refined predictions of capabilities and estimates of technical parameters (such as mass and power). It is likely this will permit the Dawn project to enhance what already promises to be a very rich scientific return.

## Acknowledgments

The members of the Dawn development team are gratefully acknowledged for the dedication and skill they have brought to the design and implementation of this ambitious and exciting project. This overview is based upon their fine work.

The work described in this paper was carried out in part at the Jet Propulsion Laboratory, California Institute of Technology, under a contract with the National Aeronautics and Space Administration.

## References

[1] C.T. Russell, et al., Dawn: a journey in space and time, Planetary and Space Science 52 (2004) 465–489 and references therein.

[2] T.H. Prettyman, et al., Gamma ray and neutron spectrometer for the Dawn Mission to 1 Ceres and 4 Vesta, IEEE Transactions on Nuclear Science 50 (2003) 1190–1197.

[3] T.H. Prettyman, et al., Mapping the elemental composition of Ceres and Vesta: Dawn's gamma ray and neutron detector, Proceedings of SPIE 5660 (2004) 107–116.

[4] A. Coradini, et al., VIRTIS: an imaging spectrometer for the Rosetta mission, Planetary and Space Science 46 (1998) 1291–1304.

[5] J.R. Brophy, et al., Status of the Dawn ion propulsion system, AIAA paper 2004-3433, 40th AIAA/ASME/SAE/ASEE Joint Propulsion Conference and Exhibit, Fort Lauderdale, FL, USA, 11–14 July 2004.

[6] M.D. Rayman, The successful conclusion of the Deep Space 1 Mission: important results without a flashy title, Space Technology 23 (2003) 185–196.

[7] C.A. Grasso, Techniques for simplifying operations using VML (virtual machine language) sequencing on Mars odyssey and SIRTF, in: Proceedings of IEEE Aerospace Conference, Big Sky, MT, USA, 8–15 March 2003.

[8] M.D. Rayman, S.N. Williams, Design of the first interplanetary solar electric propulsion mission, Journal of Spacecraft and Rockets 39 (2002) 589–595.

[9] M.D. Rayman, T.C. Fraschetti, C.A. Raymond, C.T. Russell, Preparing for the Dawn Mission to Vesta and Ceres, Paper IAC-05-A3.5.B.01, 56th International Astronautical Congress, Fukuoka, Japan, 17–21 October 2005.

[10] G.J. Whiffen, J.A. Sims, Application of a novel optimal control algorithm to low-thrust trajectory optimization, AAS paper 01-209, AAS/AIAA Space Flight Mechanics Conference, San Antonio, TX, USA, 27–30 January 2003.

[11] M.D. Rayman, P. Varghese, D.H. Lehman, L.L. Livesay, Results from the Deep Space 1 technology validation mission, Acta Astronautica 47 (2000) 475.

The science here is based on the failed LCDMHC cosmology, and is therefore incorrect. HGD cosmology shows stars come from dark matter planets, not the other way around. CHG